WORLD-BEAM® QS30 Adjustable-Field Sensors

with Background Suppression

Midsize sensors featuring extended range and background suppression mode

Features

- Bipolar discrete outputs, PNP and NPN
- 128 element photo receiver for superior performance on varying colors and textures
- 600 mm sensing range (90% White Card) in midsize QS30 housing
- Background suppression models for reliable detection of objects when the background condition is not controlled or fixed
- Linear multi-turn screw adjustment of cutoff distance
- Enhanced immunity to fluorescent lights
- Improved temperature compensation to minimize cutoff distance variation due to ambient temperature changes
- Powerful, highly collimated visible red sensing beam allows two sensors to be used in close proximity
- Models available with 2 m or 9 m (6.5' or 30') cable or integral metal quick-disconnect; or 150 mm (6") pigtail
- Tough ABS housing is rated IEC IP67; NEMA 6
- Mounting versatility via popular 30 mm threaded barrel or side-mount

Models - Background Suppression

Models	Supply Voltage	Sensing Range	Output Type
QS30AF600	10 to 30V dc	**Adjustable Cutoff Range:** 50 to 600 mm **Maximum Sensing Range:** 400mm - 6% Black Card 500mm - 18% Gray Card 600mm - 90% White Card **Minimum Sensing Range (Dead Zone):** 30mm - 6% Black Card	Bipolar (1 NPN & 1 PNP)

*Only standard 2 m (6.5') cable models are listed.

- For 9 m (30') cables: add suffix "**W/30**" to the model number (e.g., **QS30AF600 W/30**).
- For 5-Pin Integral QD, add suffix "**Q**" to the model number (e.g., **QS30AF600Q**)
- For 150 mm (6") PVC cable with a 5-pin Euro-style connector, add suffix "**Q5**" to the model number (e.g., **QS30AF600Q5**)

WARNING: Not To Be Used for Personnel Protection
Never use this product as a sensing device for personnel protection. Doing so could lead to serious injury or death. This product does NOT include the self-checking redundant circuitry necessary to allow its use in personnel safety applications. A sensor failure or malfunction can cause either an energized or de-energized sensor output condition.

Overview

Banner's WORLD-BEAM® QS30 Adjustable-Field Sensors with Background Suppression ignore objects beyond the set cutoff distance. Background suppression mode can be used in most situations with varying object color and position or with varying background conditions. The default mode for background suppression sensors is Light Operate (LO).

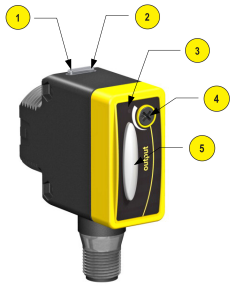

Figure 1. Sensor Features

1. Green: Power Indicator LED
2. Yellow: Light Sensed Indicator LED (Flashes for Marginal Conditions)
3. Blue/Red: End-of-travel (EOT) Indicator LED
4. Cutoff Distance Adjustment Screw
5. Yellow: Output Indicator LED

Sensor Installation

Required Orientation of Object to Sensor

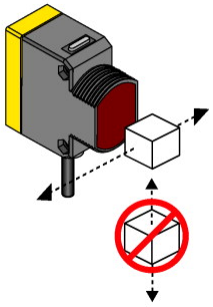

Figure 2.

Sensor Setup - Background Suppression (LO mode)

Set cutoff distance approximately midway between the farthest target and the closest background

1. Mount the sensor with the darkest object at the longest application distance (the distance to object must be less than shown in *Figure 7.* on page 6 for your object color).
2. Turn adjustment pot **counter-clockwise** until it clicks and EOT LED turns **on red** (4 turns).
3. Turn the adjustment pot **clockwise** until the yellow indicator turns **on**.
4. Replace darkest object with the brightest background at the closest application distance.
5. Turn the adjustment pot **clockwise**, counting the revolutions, until the Yellow Output LED turns **on**.
6. Turn the adjustment pot **counter-clockwise** half the number of turns from step 5. This will place the cutoff distance midway between the object and the background switchpoints (See Figure at right).

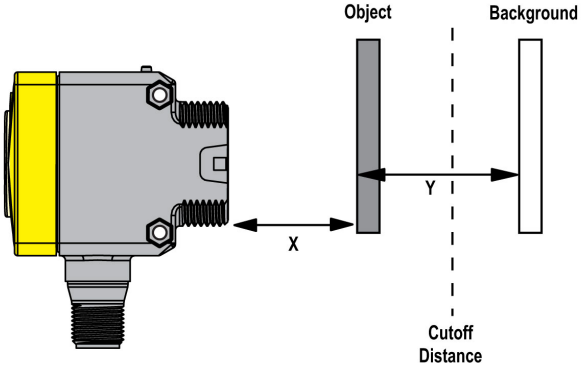

Figure 3.

X: Distance to Object

Y: Minimum Separation Between Object and Background

Setup Example

Background Suppression Mode Application Example

Background Suppression Mode: Objects beyond the set cutoff distance will not be detected.

Background suppression mode can be used in most situations with varying object color and position or with varying background conditions.

To ensure reliable background suppression, a minimum separation distance between the object and the background is necessary. See "Minimum Separation Distance Between Object and Background: Background Suppression Mode" (*Figure 7.* on page 6) to determine the minimum separation distance.

Example: An object with a reflectivity similar to black paper is set 300 mm away from the sensor. A background with reflectivity similar to white paper is set 350 mm away from the sensor. According to *Figure 7.* on page 6, the minimum separation distance between the object and the background is 20 mm. In this application, reliable detection will be achieved when set up according to the procedure outlined in Sensor Setup - Background Suppression Mode.

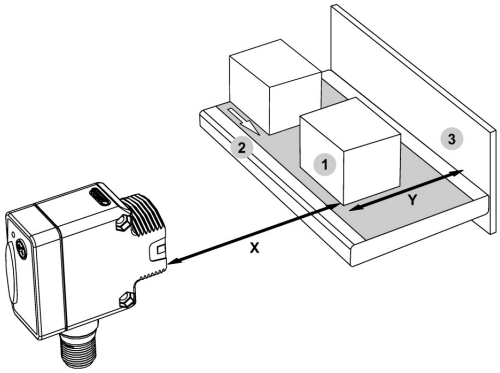

Figure 4.

1. Object
2. Conveyor
3. Background

X: Distance to Object = 300 mm

Y: Minimum Separation Between Object and Background > 20 mm

Remote Configuration

The Remote Configuration function may be used to SET the sensor's cutoff distance remotely or to disable the cutoff distance adjustment screw for security. Connect the gray/Input wire of the sensor to ground (0V dc), with a remote switch connected between them. Pulse the gray/Input wire according to the diagrams in the configuration procedures. The length of the individual pulses is equal to the value **T: 0.04 seconds≤T≤0.8 seconds**

Connecting the gray/Input wire

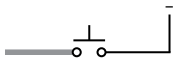

Figure 5.

Object SET:

The distance to the target object is sampled; the sensor optimizes the cutoff distance beyond the distance to the target object. In RUN mode, objects located between the minimum sensing range and the cutoff distance are sensed; anything beyond the cutoff distance (e.g., other objects or background surfaces) is ignored.

Step	Procedure	Result
Sample Target Object	• Present target object • Single-pulse the gray/Input wire 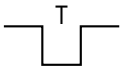	• Green Power and Yellow Light Sensed LEDs flash alternately 3 times (EOT LED alternately flashes Red/Blue 3 times at the same time)
Return to Run Mode	• Sensor returns automatically to RUN mode	• **SET accepted:** Sensor returns directly to RUN mode • **SET failed:** Feedback is displayed for 2 seconds (Yellow Light Sensed LED OFF, Green Power LED flashes 4 times)

Cutoff Distance Adjustment Screw Disable/Enable:

Step	Procedure	Result
Disable	• Quad-pulse the gray/Input wire 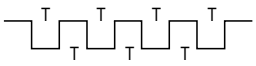	• EOT LED flashes Red 4 times • Cutoff point adjustment screw disabled
Enable	• Quad-pulse the gray/Input wire 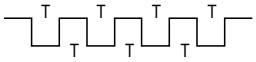	• EOT LED flashes Blue 4 times • Cutoff point adjustment screw enabled

End-of-Travel (EOT) Indicator LED

Cutoff Distance Adjustment Screw Status	Result
• Cutoff distance adjustment screw in between max. and min. end-of-travel limits	• EOT LED OFF
• Cutoff distance adjustment screw turned clockwise to max. end-of-travel limit	• EOT LED ON Blue
• Cutoff distance adjustment screw turned counter-clockwise to min. end-of-travel limit	• EOT LED ON Red
• Cutoff distance adjustment screw turned while disabled	• EOT LED alternately flashes Red/Blue 4 times

Output States

Background Suppression Mode					
Output	Object Inside Minimum Sensing Range	Object Between Minimum Sensing Range and Cutoff Distance		Object Beyond Cutoff Distance	
		LO	DO	LO	DO
Yellow Output LED	Undefined	ON	OFF	OFF	ON
Black Wire (Pin 4)	Undefined	ON	OFF	OFF	ON
White Wire (Pin 2)	Undefined	ON	OFF	OFF	ON
Yellow Light Sensed LED	Undefined	ON or Flashing (if < 1.5x excess gain)		OFF	

Performance Curves

Typical Emitter Spot Diameter vs. Distance

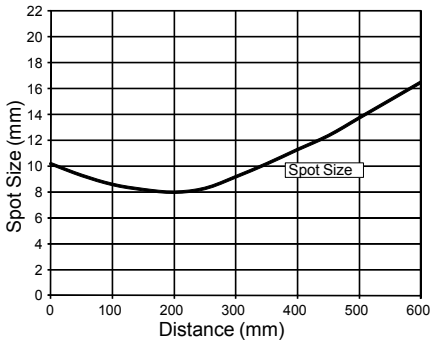

X: Range (mm)

Y: Emitter Spot Diameter (mm)

Figure 6.

Minimum Separation Distance* Between Object and Background: Background Suppression Mode

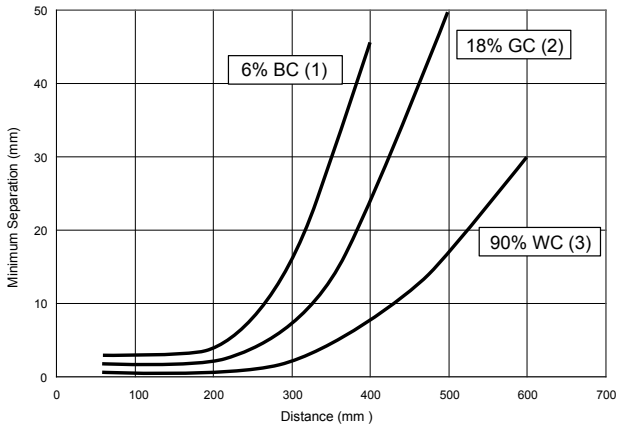

Figure 7.

X: Distance to Object (mm)

Y: Minimum Separation Between Object and Background (mm)

1: Black object/ White background

2: Gray object/ White background

3: White object/ White background

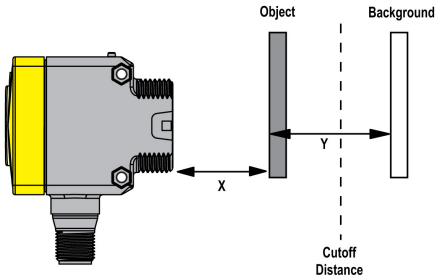

* Targets with severe color contrasts can increase the Minimum Separation Distance

Excess Gain Curves

QS30AF600 Excess Gain Curve (based on 90% White Card)

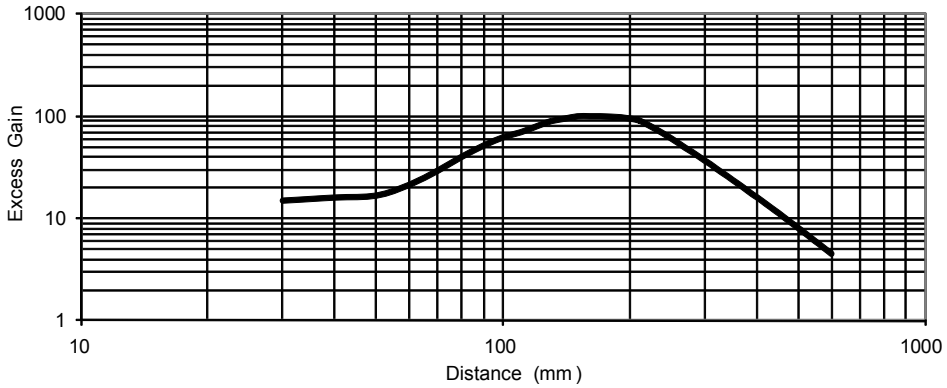

X: Distance (mm)

Y: Excess Gain

Figure 8. Excess Gain Curve (based on 90% White Card)

Specifications

Sensing Range

Adjustable Cutoff Range: 50 to 600 mm

Maximum Sensing Range: 400 mm - 6% Black Card, 500mm - 18% Gray Card, 600mm - 90% White Card

Minimum Sensing Range (Dead Zone): 30 mm - 6% Black Card

Supply Voltage and Current

10 to 30V dc (10% maximum ripple within specified limits);

Current consumption: < 80 mA at 10V dc; < 40 mA at 30V dc

Supply Protection

Protected against reverse polarity and transient voltages

Sensing Beam

Visible red LED, 660 nm

Output Configuration

Solid-state bipolar (SPDT): both sinking and sourcing

Rating: 100 mA total output current (derate 1 mA per °C above 30° C)

Off-state leakage current: < 5 µA at 30V dc

ON-state saturation voltage:

- **NPN:** less than 1.5V @ 100 mA
- **PNP:** less than 2.0V @ 100 mA

Output Protection Circuitry

Protected against false pulse on power-up and continuous overload or short circuit of outputs.

Output Response

5 millisecond ON/OFF;

200 ms delay on power-up; outputs do not conduct during this time

Repeatability

750 µs

Adjustments

Four-turn adjustment screw sets cutoff distance between min. and max. positions, clutched at both ends of travel

Indicators

2 Indicator LEDs on sensor top:

- **Green ON steady:** Power ON
- **Yellow ON steady:** Light sensed (excess gain > 1.5x)
- **Yellow flashing:** Marginal sensing condition (excess gain < 1.5x)

2 Indicator LEDs on sensor back:

- Small Blue/Red End-of-travel (EOT) LED
- Large Yellow Output LED

Construction

ABS housing, acrylic lens cover;

2.5 mm and 3 mm mounting hardware included

QD models: nickel-plated brass

Environmental Rating

IEC IP67; NEMA 6

Connections

2 m (6.5') 5-wire PVC cable, 9 m (30') PVC cable, or 5-pin Integral QD or Euro-style 150 mm (6") pigtail QD, depending on model

Operating Conditions

Temp: –20° to +60° C (–4° to 140° F)

Relative Humidity: 95% @ 50° C (non-condensing)

Certifications

CE

Dimensions (QD Models)

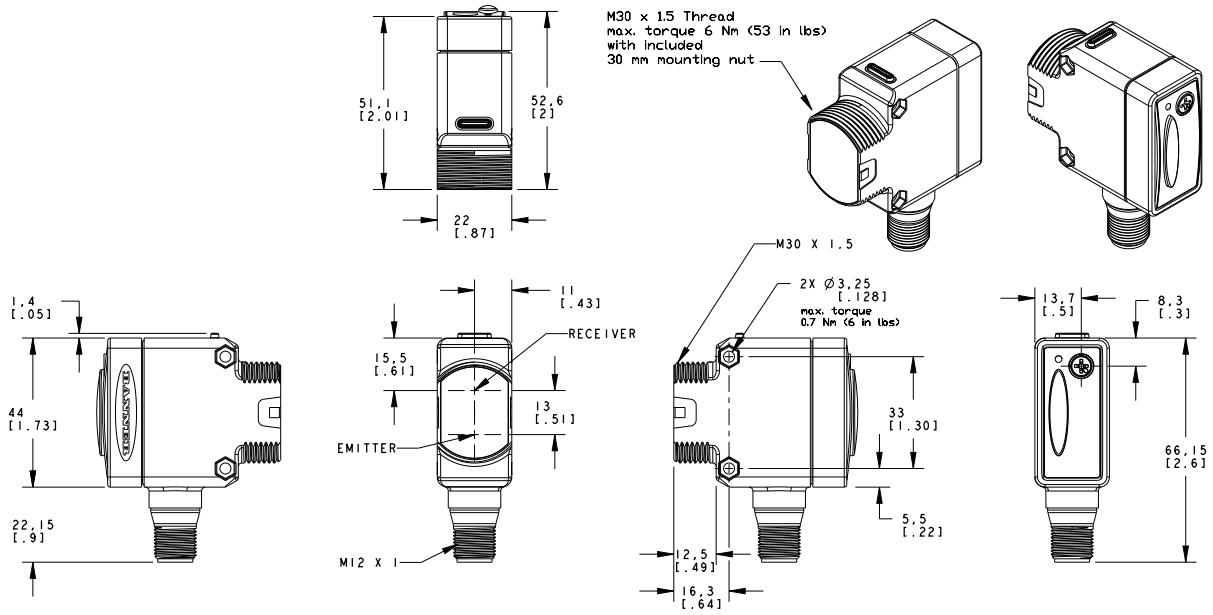

Dimensions (Cable Models)

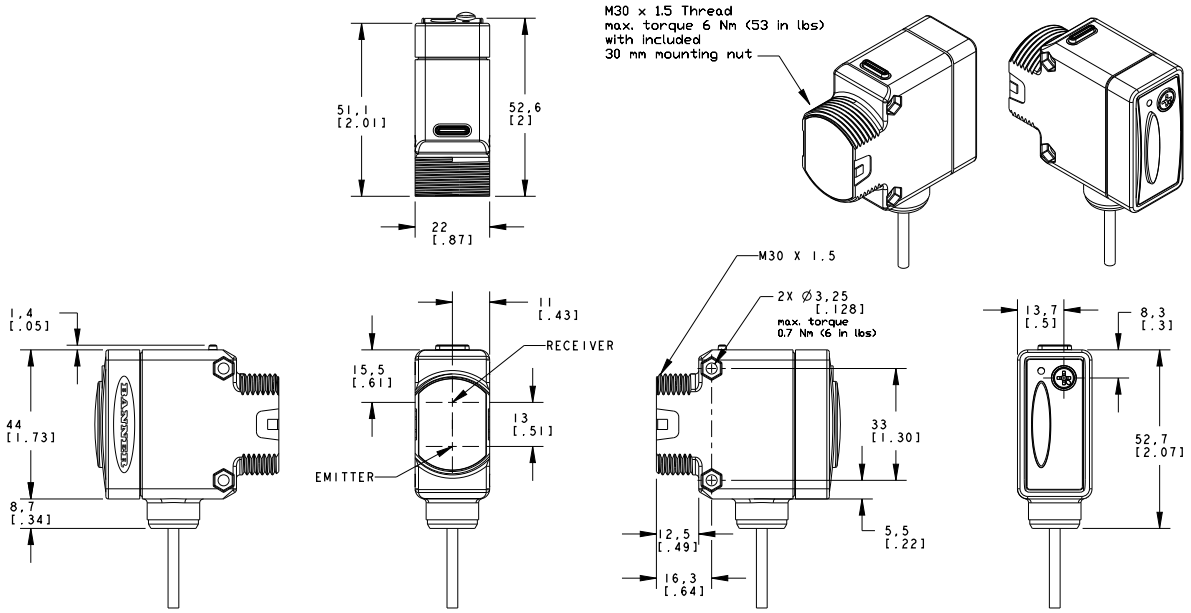

Hookups

Bipolar Outputs

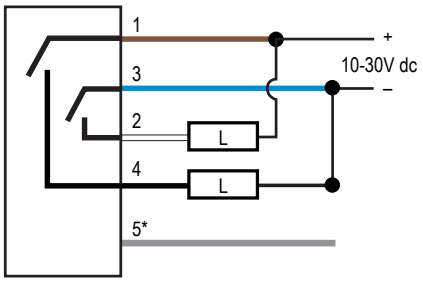

Key:

1 = Brown
2 = White
3 = Blue
4 = Black
5 = Gray (Input*)
L = Load

*Inputs	
or	LO (default)
	DO
	Remote Configuration

Quick-Disconnect (QD) Cordsets

5-Pin Euro-Style Cables - Single Ended		
Model	**Dimensions**	**Pinout**
5-Pin M12/Euro-Style Cordsets (straight connector) **MQDC1-506** , 2 m (6') **MQDC1-515** , 5 m (15') **MQDC1-530** , 9 m (30')	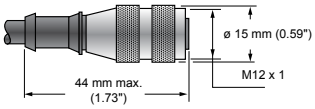	Female 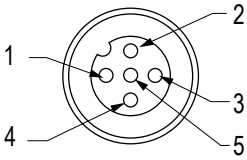 1=Brown 2=White 3=Blue 4=Black 5=Gray (not used)
5-Pin M12/Euro-Style Cordsets (right-angle connector) **MQDC1-506RA** , 2 m (6') **MQDC1-515RA** , 5 m (15') **MQDC1-530RA** , 9 m (30')	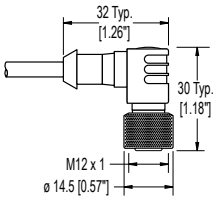	

Banner Engineering Corp Limited Warranty

Banner Engineering Corp. warrants its products to be free from defects in material and workmanship for one year following the date of shipment. Banner Engineering Corp. will repair or replace, free of charge, any product of its manufacture which, at the time it is returned to the factory, is found to have been defective during the warranty period. This warranty does not cover damage or liability for misuse, abuse, or the improper application or installation of the Banner product.

THIS LIMITED WARRANTY IS EXCLUSIVE AND IN LIEU OF ALL OTHER WARRANTIES WHETHER EXPRESS OR IMPLIED (INCLUDING, WITHOUT LIMITATION, ANY WARRANTY OF MERCHANTABILITY OR FITNESS FOR A PARTICULAR PURPOSE), AND WHETHER ARISING UNDER COURSE OF PERFORMANCE, COURSE OF DEALING OR TRADE USAGE.

This Warranty is exclusive and limited to repair or, at the discretion of Banner Engineering Corp., replacement. **IN NO EVENT SHALL BANNER ENGINEERING CORP. BE LIABLE TO BUYER OR ANY OTHER PERSON OR ENTITY FOR ANY EXTRA COSTS, EXPENSES, LOSSES, LOSS OF PROFITS, OR ANY INCIDENTAL, CONSEQUENTIAL OR SPECIAL DAMAGES RESULTING FROM ANY PRODUCT DEFECT OR FROM THE USE OR INABILITY TO USE THE PRODUCT, WHETHER ARISING IN CONTRACT OR WARRANTY, STATUTE, TORT, STRICT LIABILITY, NEGLIGENCE, OR OTHERWISE.**

Banner Engineering Corp. reserves the right to change, modify or improve the design of the product without assuming any obligations or liabilities relating to any product previously manufactured by Banner Engineering Corp.